Consoles

Console 110 single

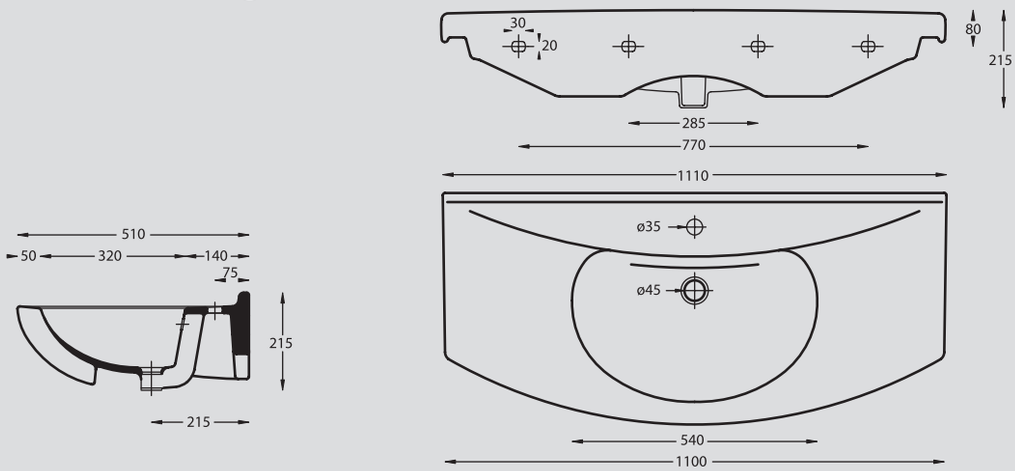

Console 85cm, 75cm, 65cm, & 55cm single

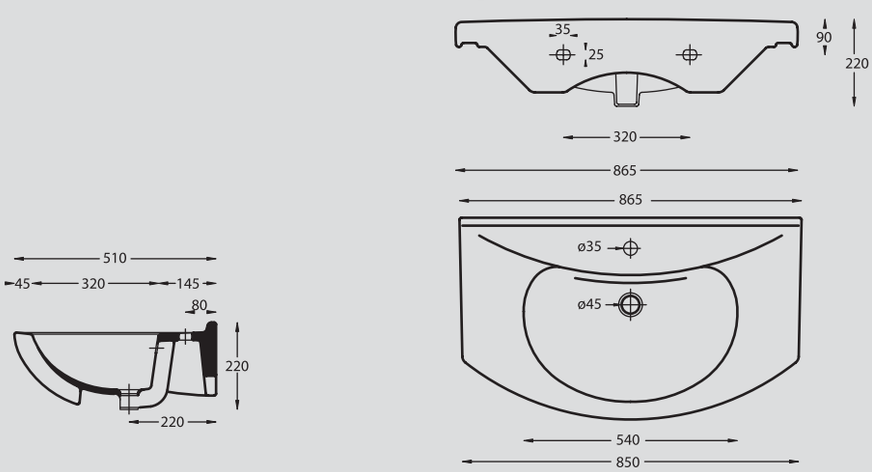

Console 110 double

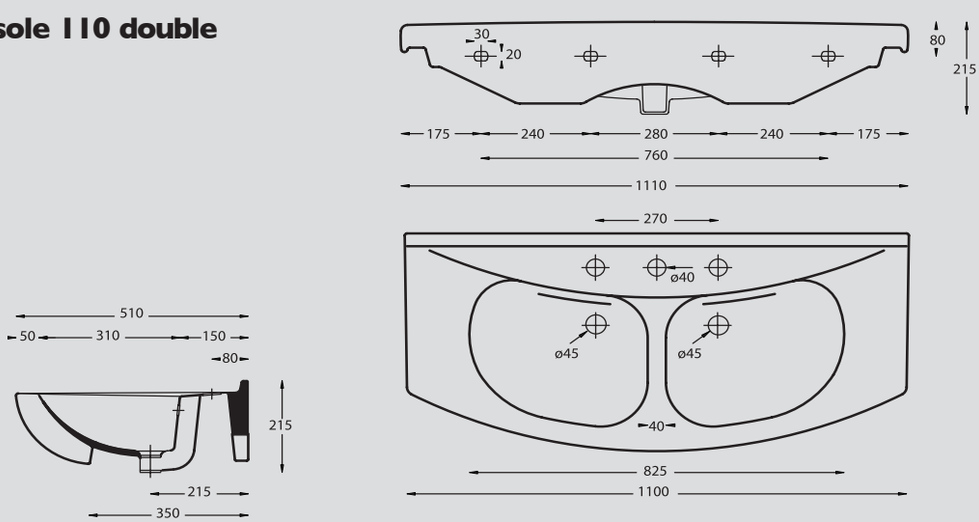

All dimensions illustrated are nominal and subject to the normal variation within the ceramic manufacturing process. Lecico reserves the right to modify its products without prior notification.