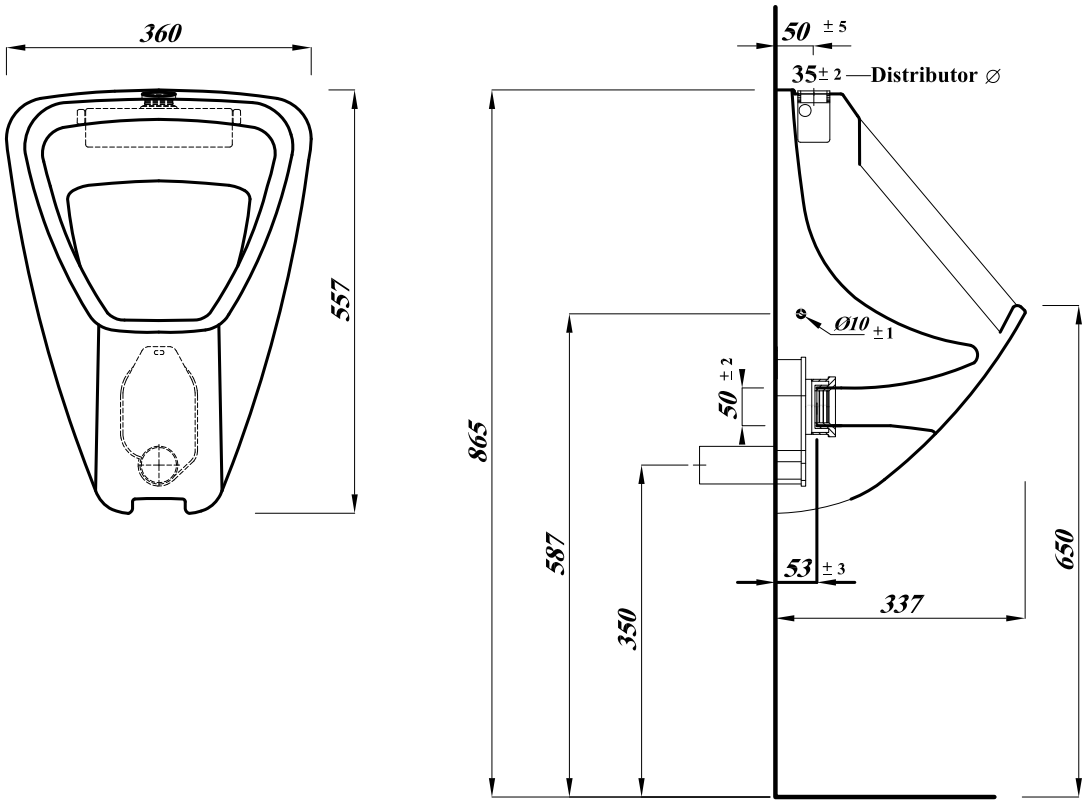

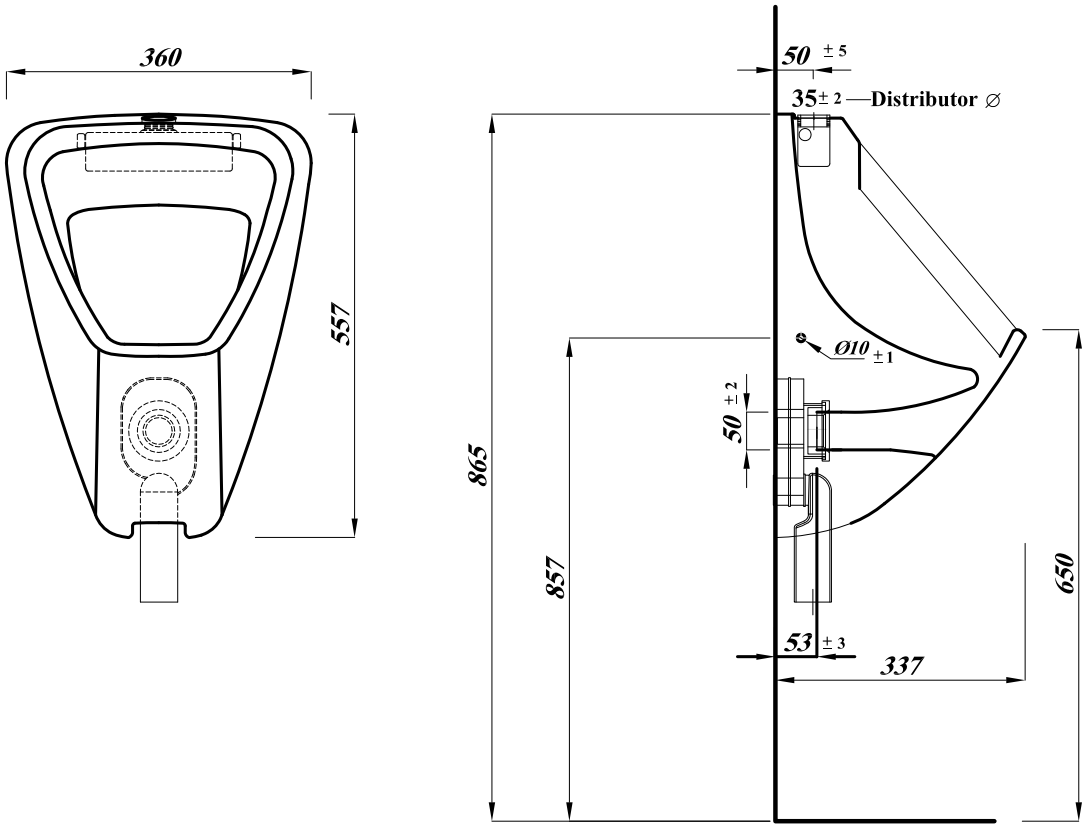

Note: All dimensions are approximate and subject to normal ceramic variation .Lecico reseve the right to change our product without prior notification.

Revision No .	Reason .	Date Of Rev .
0	Initial Issue .	13/5/2013
1	The height has been modified from 560to 557 & the projection from 333 to 337 to be in line with production results.	8/7/2014
2	Installation heights have been showed.	24/11/2014

Lecico	Atlas Geo Urinal Top Inlet (Provisional Drawing)	Scale : 1:10	Drawing No.:000934