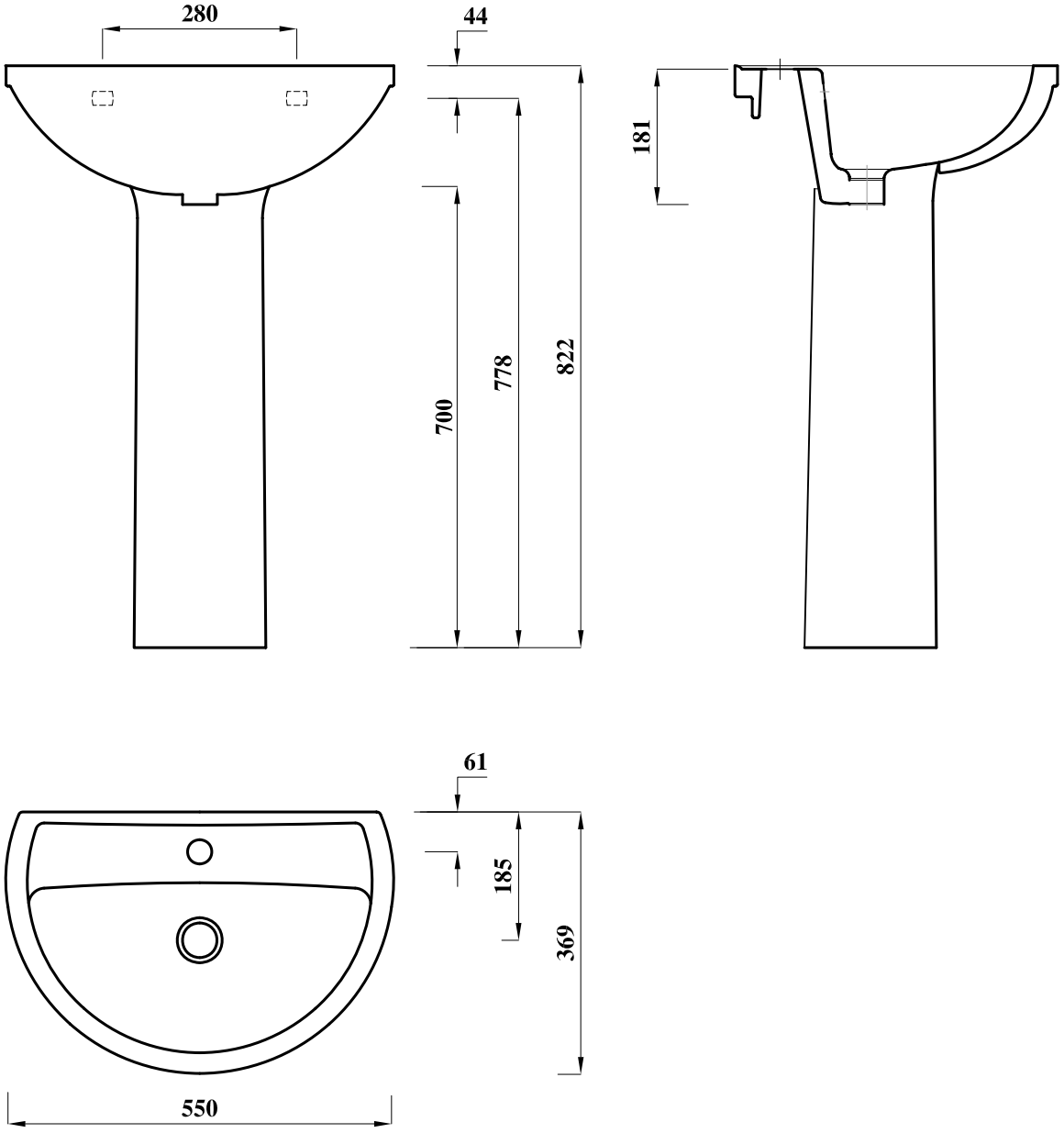

Note: All dimensions are approximate and subject to normal ceramic variation .Lecico reseve the right to change our product without prior notification.

Revision No .	Reason .	Date Of Rev .
0	Initial Issue .	14/9/2009
1	Some Dimensions Have Been Modified.	29/10/2011

Lecico	Malaga WB 55 Short With Ped	Scale : 1:10	Drawing No.:000396