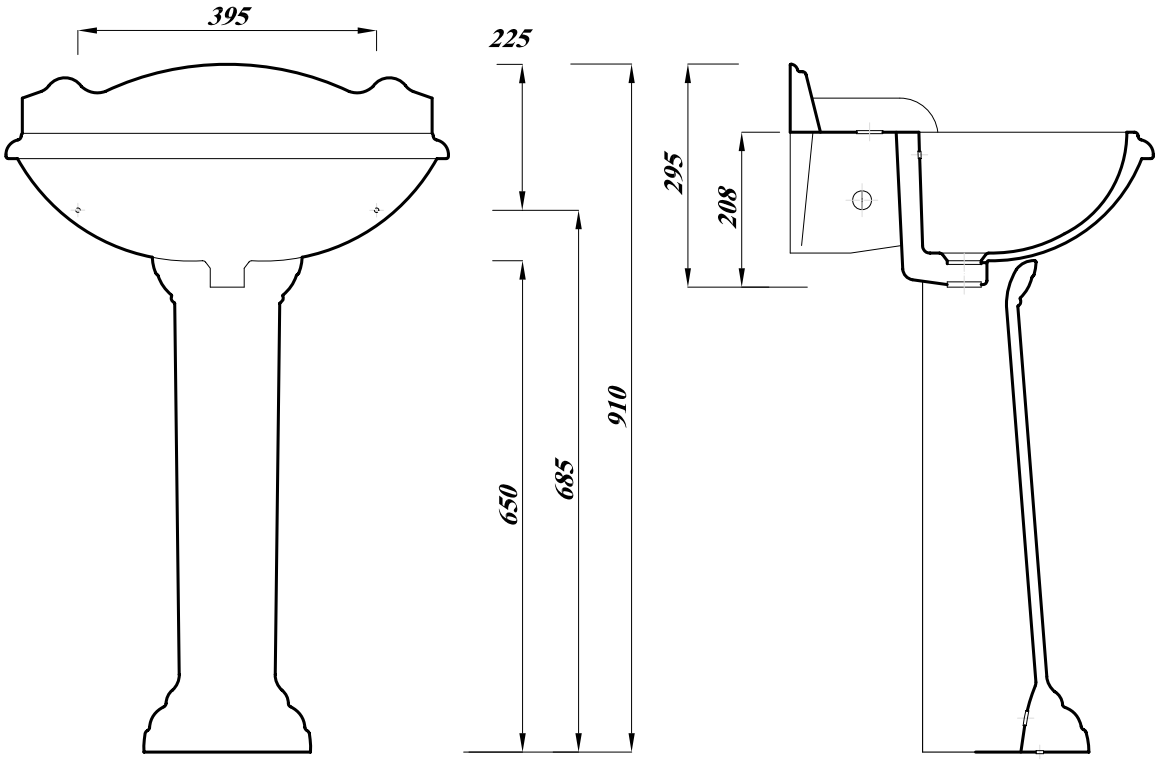

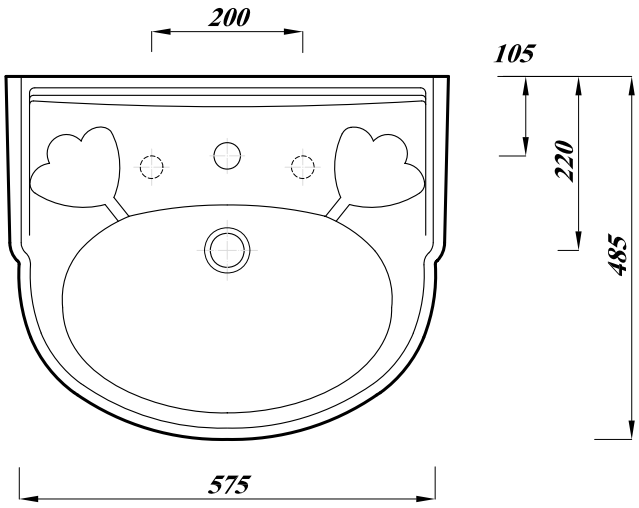

Note: All dimensions are approximate and subject to normal ceramic variation .Lecico reseve the right to change our product without prior notification.

Revision No .	Reason .	Date Of Rev .
0	Initial Issue .	17/8/2001
1	Some Dimensions Have Been Modified.	10/1/2011

Lecico	Kathrina WB with Eugenie Ped .	Scale : 1:10 Drawing No.:000315 Articlenumber:FS12101A100000	PLC:Katherine WB