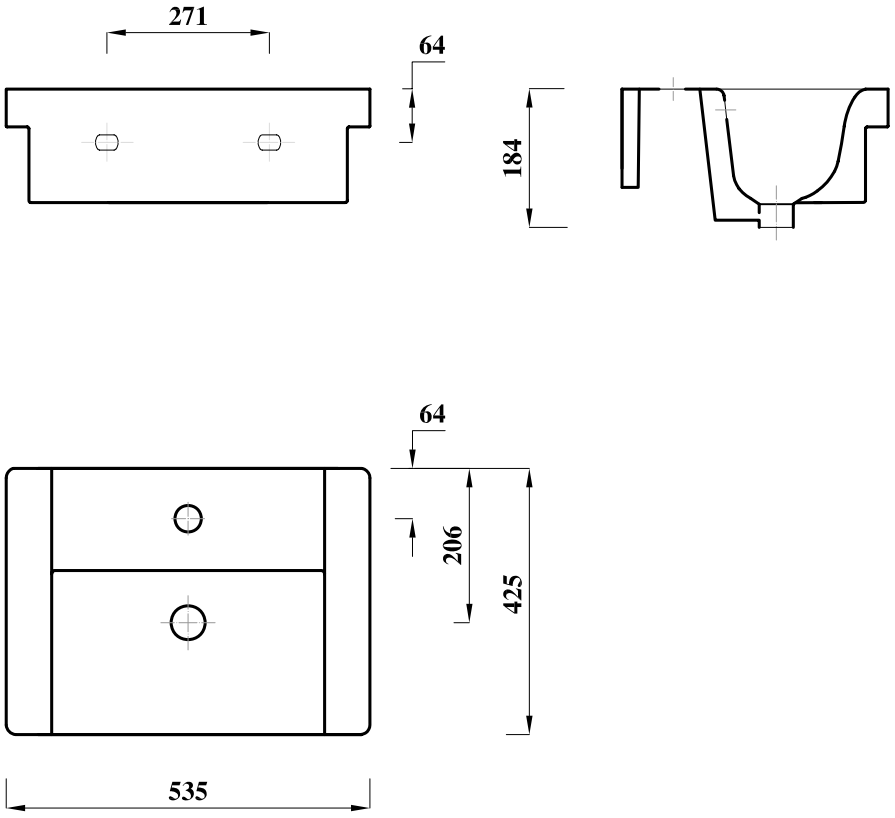

Disclaimer:
-Fixture dimensions are nominal and conform to tolerances as per European Norms.
-This drawing may not be copied or passed on to a third party without our permission.
-Lecico accepts no liability whatsoever for this data and technical drawings .Other parties use them at their own risk.
-The dimensions indicated are not binding ,Lecico reserves the right to make product / drawings changes without prior notice.

Revision No .	Reason .	Date Of Rev .
0	Initial Issue .	25/11/2008
1	The Name Has Been Changed From Steps To Lecico Steps	31/1/2009
2	To Be In Line With final Pieces From The Production .	23/2/2009
3	Some Dimensions Have Been Modified .	3/2/2010

Lecico	Lecico Steps WB Vanity 53cm	Scale : 1:10	Drawing No.:00324