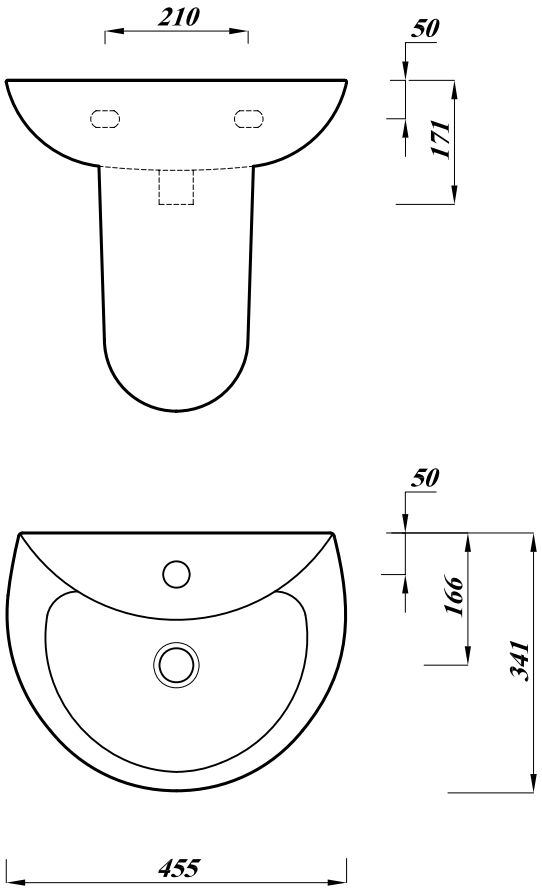

Note: All dimensions are approximate and subject to normal ceramic variation .Lecico reseve the right to change our product without prior notification.

Revision No .	Reason .	Date Of Rev .
0	Initial Issue .	17/11/2012

Lecico	Doc M Centre Tap Hole Basin 45cm No Overflow	Scale : 1:10 Drawing No.:000743	UK Code: DBASIN1