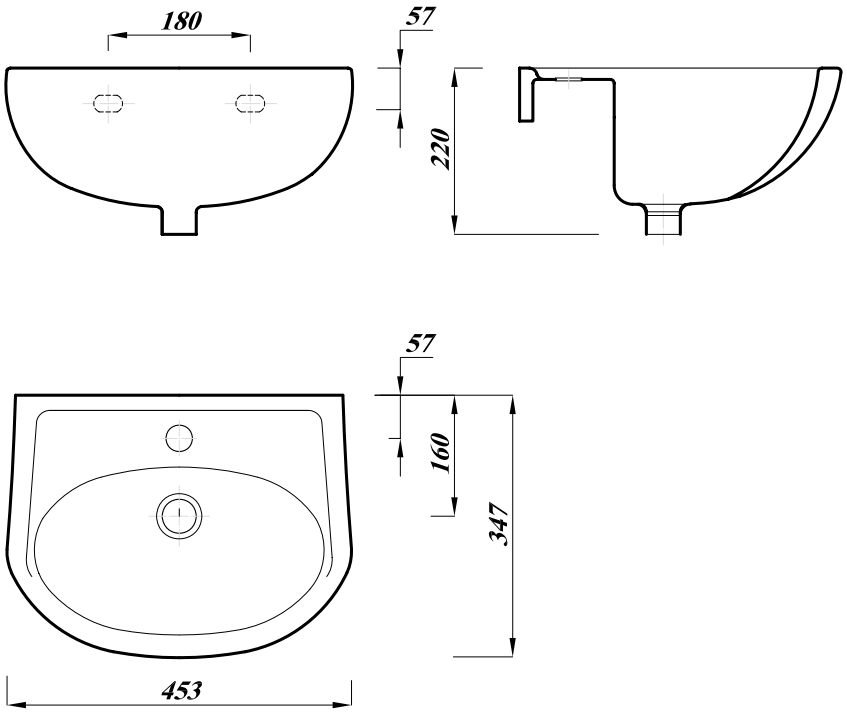

Note: All dimensions are approximate and subject to normal ceramic variation .Lecico reseve the right to change our product without prior notification.

Revision No .	Reason .		Date Of Rev .
0	Initial Issue .		6/2/2010
Lecico	Doc M WB 45cm (Provisional Drawing From Block Mould Sample)	Scale : 1:10 Drawing No.:000444	Drawn By : Moh. Refaat