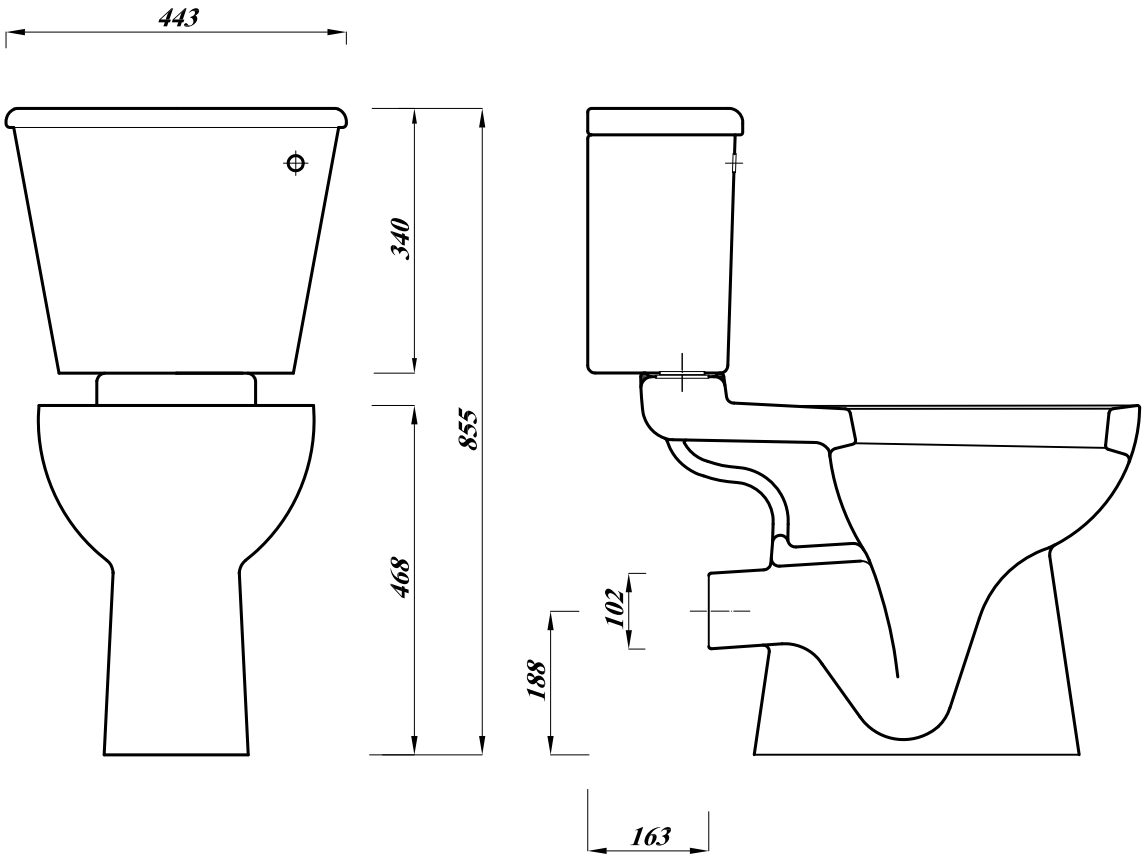

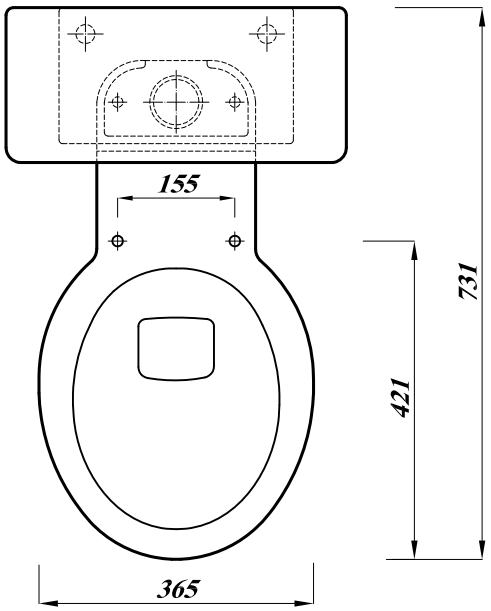

Disclaimer:
-Fixture dimensions are nominal and conform to tolerances as per European Norms.
-This drawing may not be copied or passed on to a third party without our permission.
-Lecico accepts no liability whatsoever for this data and technical drawings .Other parties use them at their own risk.
-The dimensions indicated are not binding ,Lecico reserves the right to make product / drawings changes without prior notice.

Revision No .	Reason .	Date Of Rev .
0	Initial Issue .	12/2/2006
1	Some Dimensions Have Been Modified .	22/4/2009
2	Some dimensions have been modified to be in line with production results	29/12/2014

Lecico	Soraya WC Disabled With Soraya Tank	Scale : 1:10 Drawing No.:00096	PLC: Atlas WC Disabled