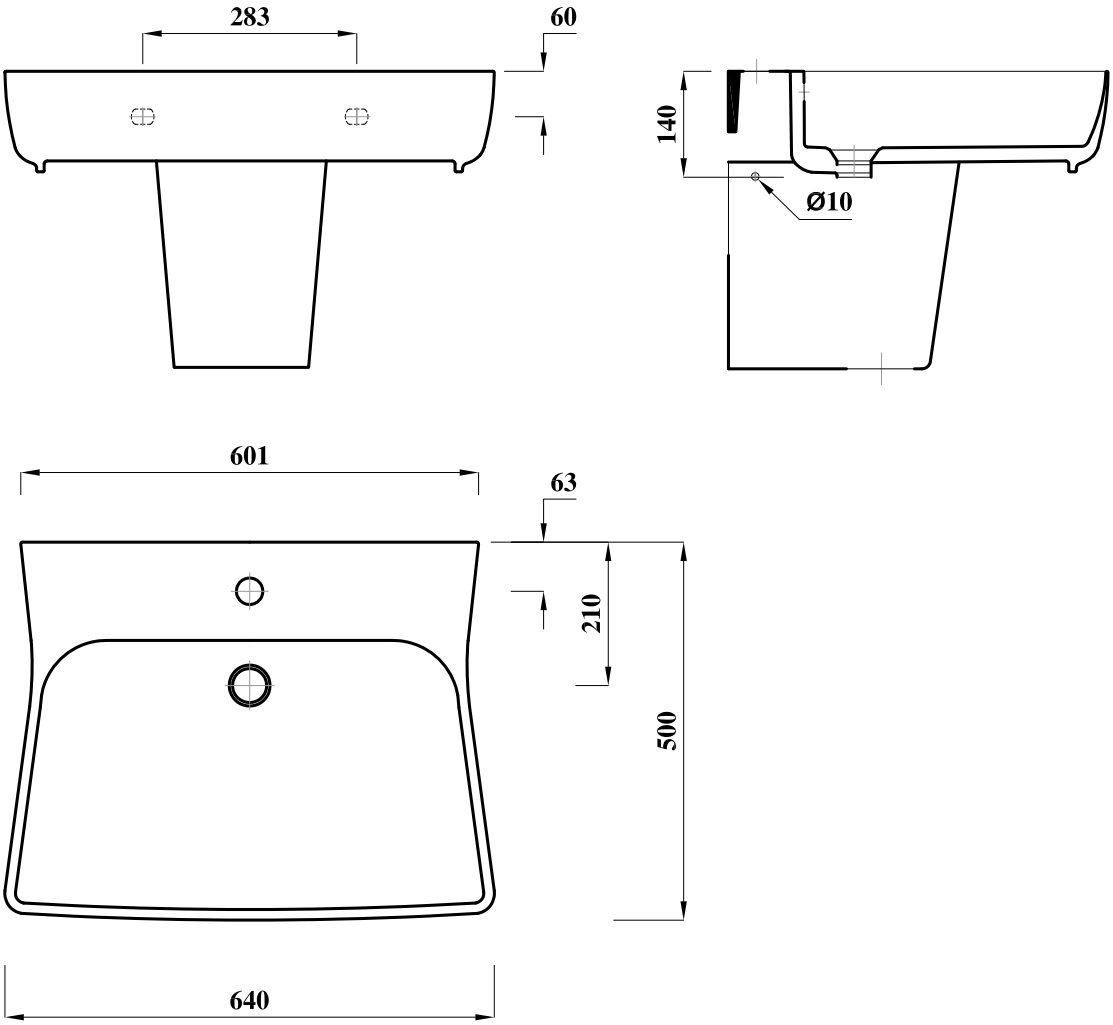

Note: All dimensions are approximate and subject to normal ceramic variation .Lecico reseve the right to change our product without prior notification.

Revision No .	Reason .	Date Of Rev .
0	Initial Issue .	26/1/2010
Lecico	Mini 9.0 WB 65cm	Scale : 1:10