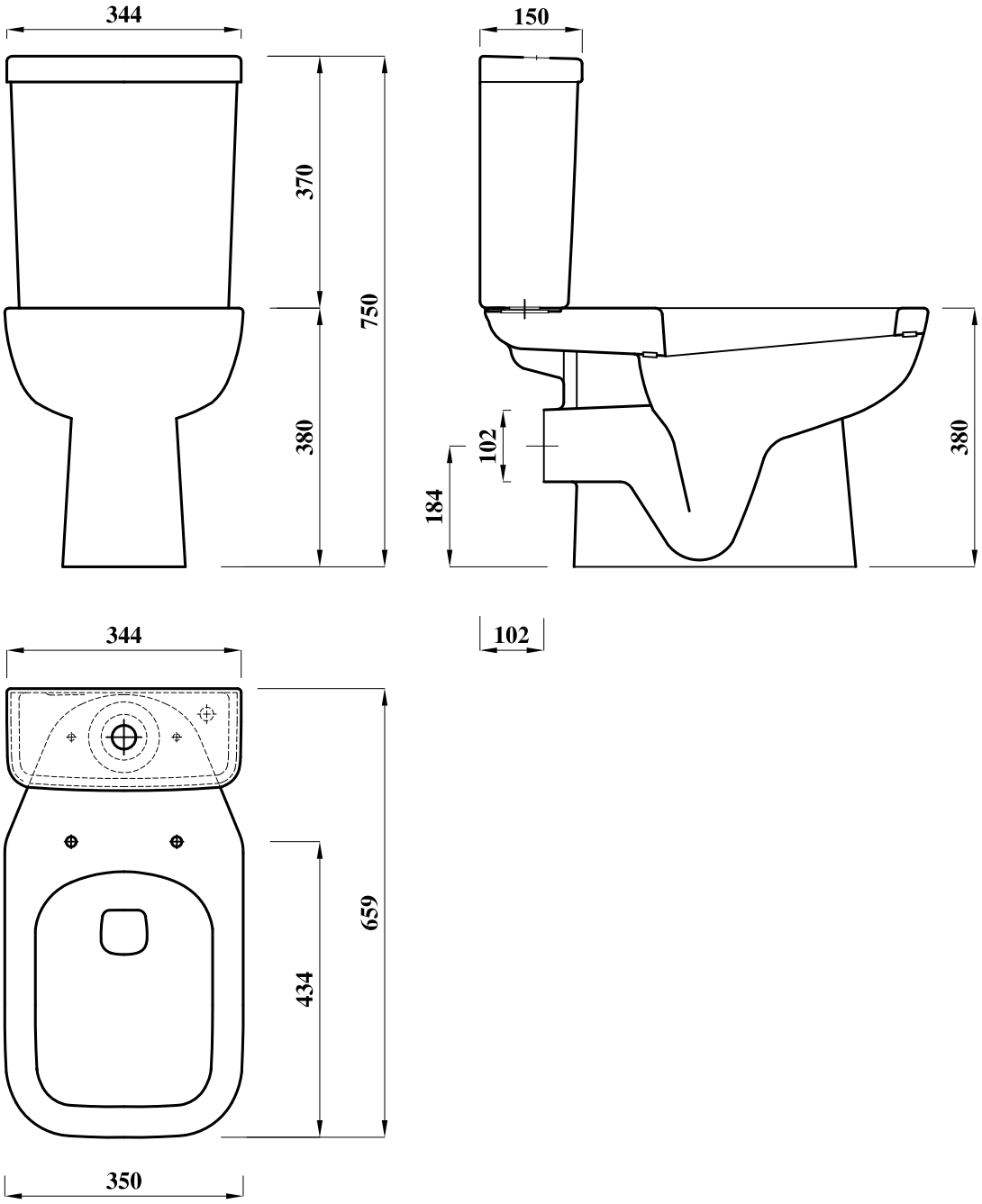

Disclaimer:
-Fixture dimensions are nominal and conform to tolerances as per European Norms.
-This drawing may not be copied or passed on to a third party without our permission.
-Lecico accepts no liability whatsoever for this data and technical drawings .Other parties use them at their own risk.
-The dimensions indicated are not binding ,Lecico reserves the right to make product / drawings changes without prior notice.

Revision No .	Reason .	Date Of Rev .
0	Initial Issue .	25/5/2014
1	The name has been changed from Contemporary Light to Senner	23/8/2014

Lecico	Senner WC P Square With Tank (Provisional Drawing)	Scale : 1:10	Drawing No.:0001005