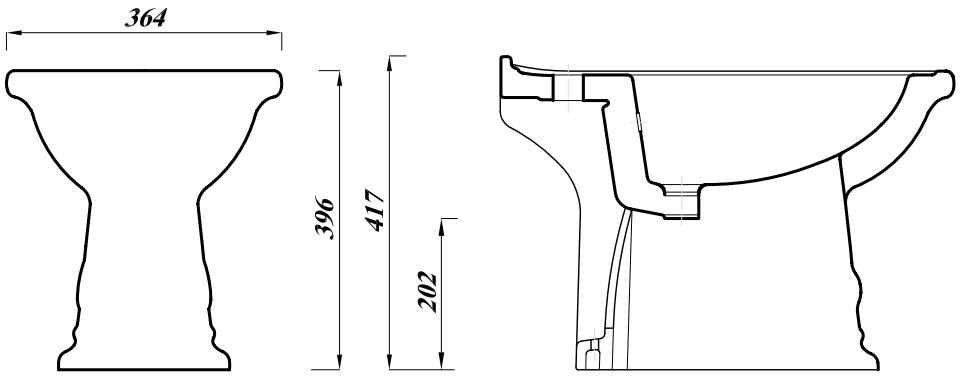

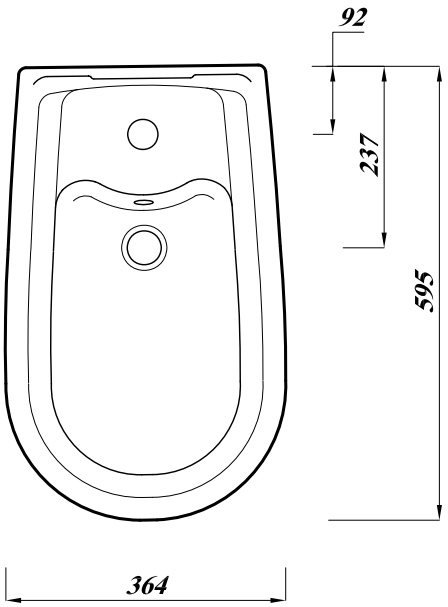

Note: All dimensions are approximate and subject to normal ceramic variation .Lecico reseve the right to change our product without prior notification.

Revision No .	Reason .	Date Of Rev .
0	Initial Issue .	24/3/2006
1	Some Dimensions Have Been Modified.	9/12/2009

Lecico	Andalusia Bidet	Scale : 1:10	Drawing No.:00033